北京交通大學

信号与系统

School of Electronic
and Information Engineering

Zhou Hang

2025.3

BJTU Signals and Systems Course Group, Copyright© 2025

Complex Frequency Domain Analysis of Continuous Time Signals and Systems

Complex Frequency Domain Analysis of Continuous Signals

- Complex Frequency Domain Representation of Continuous Signals
- Commonly used one-sided Laplace transform
- Properties of one-sided Laplace transform
- One-sided inverse Laplace transform
- Bilateral Laplace transform and inverse transform

Complex Frequency Domain Analysis of Continuous LTI Systems

- Complex Frequency Domain Description of Continuous Systems
- System functions and system characteristics
- Simulation of Continuous Time Systems
- Complex Frequency Domain Analysis of System Response
- Realization of complex frequency domain analysis MATLAB

Simulation of Continuous Time Systems

- **Basic connections of the system**

  Cascading of systems

  Parallel connection of the system

  Feedback loop

- **Analog Block Diagram of the System**

  Direct structure

  Cascade structure

  Parallel structure

Basic joins for continuous-time systems

※ Cascading of systems

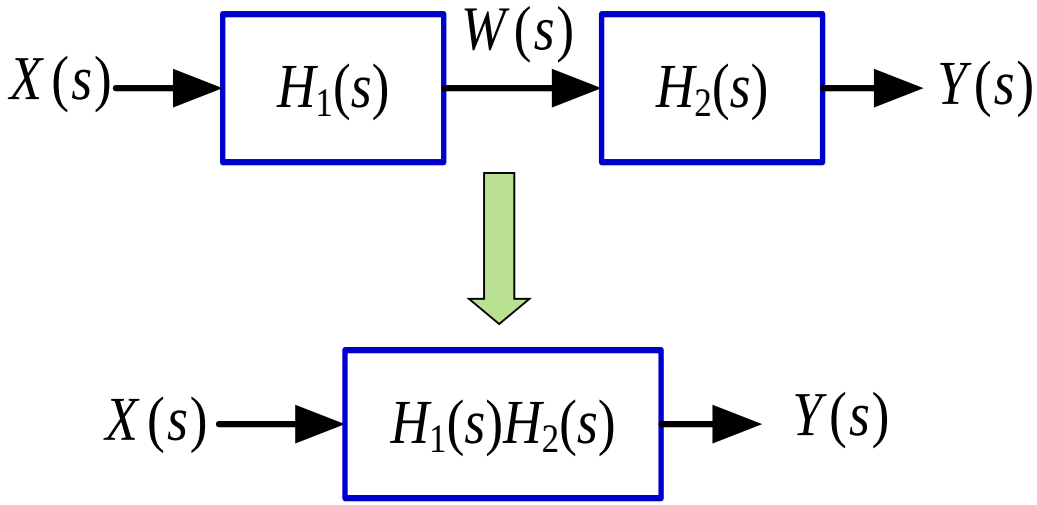

$$Y(s) = H_2(s)W(s) = H_2(s)H_1(s)X(s)$$

Basic joins for continuous-time systems

※ **Parallel connection of the system**

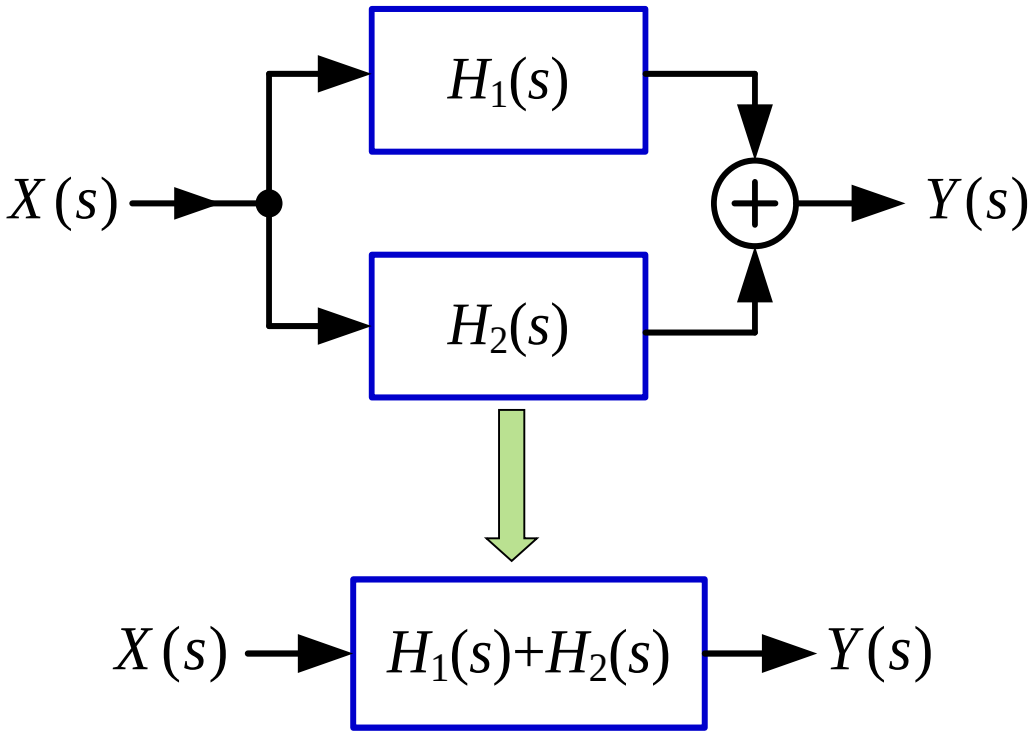

$$Y(s)=H_1(s)X(s)+H_2(s)X(s)=[H_1(s)+H_2(s)]X(s)$$

Basic joins for continuous-time systems

※ **Basic joins for continuous-time systems**

$$E(s) = X(s) - \beta(s)Y(s)$$

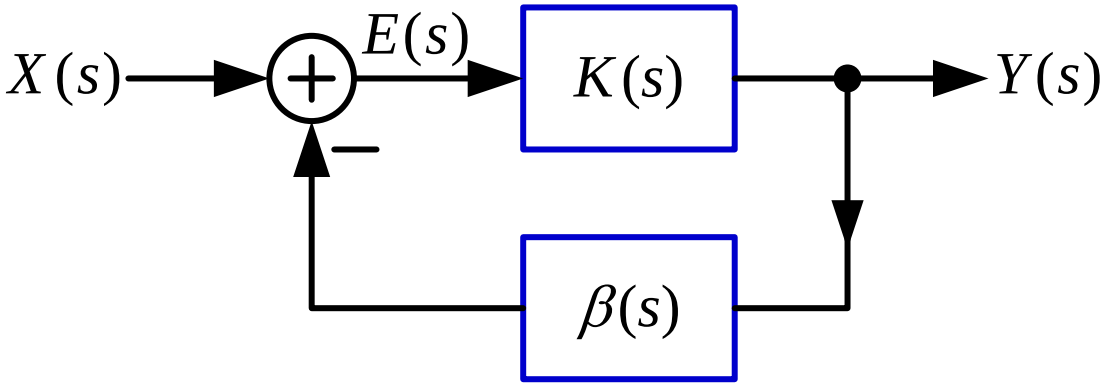

$$Y(s) = E(s)K(s) = X(s)K(s) - \beta(s)K(s)Y(s)$$

$$Y(s) = \frac{K(s)}{1+\beta(s)K(s)} X(s)$$

$$H(s) = \frac{K(s)}{1+\beta(s)K(s)}$$

Simulation block diagram of a continuous-time LTI system

The system function of the n -order continuous-time LTI system is

$$H(s)=\frac{b_m s^m+b_{m-1}s^{m-1}+\cdots+b_1 s+b_0}{s^n+a_{n-1}s^{n-1}+\cdots+a_1 s+a_0}$$

Let m=n, and consider $H(s)$ as the cascade of two subsystems, namely

$$H(s)=\underbrace{\frac{1}{\sum_{i=0}^{n} a_i s^i}}_{H_1(s)}\cdot\underbrace{\sum_{j=0}^{n} b_j s^j}_{H_2(s)},\quad a_n=1$$

Simulation block diagram of continuous-time LTI system

※ Direct structure

$$H(s)=\underbrace{\frac{1}{\sum_{i=0}^{n} a_i s^i}}_{H_1(s)}\cdot\underbrace{\sum_{j=0}^{n} b_j s^j}_{H_2(s)}$$

$$H_1(s)=\frac{1}{\sum_{i=0}^{n} a_i s^i}=\frac{W(s)}{X(s)}$$

$$H_2(s)=\sum_{j=0}^{n} b_j s^j=\frac{Y(s)}{W(s)}$$

The differential equations for these two subsystems are

$$w^{(n)}(t)+a_{n-1}w^{(n-1)}(t)+\cdots+a_1 w'(t)+a_0 w(t)=x(t) \quad ①$$

$$y(t)=b_n w^{(n)}(t)+b_{n-1}w^{(n-1)}(t)+\cdots+b_1 w'(t)+b_0 w(t) \quad ②$$

Simulation block diagram of a continuous-time LTI system

※ Direct structure

Rewrite formula ① as

$$w^{(n)}(t) = x(t) - a_{n-1}w^{(n-1)}(t) - \cdots - a_1 w'(t) - a_0 w(t)$$

Implement the equation with adders, multipliers, and integrators

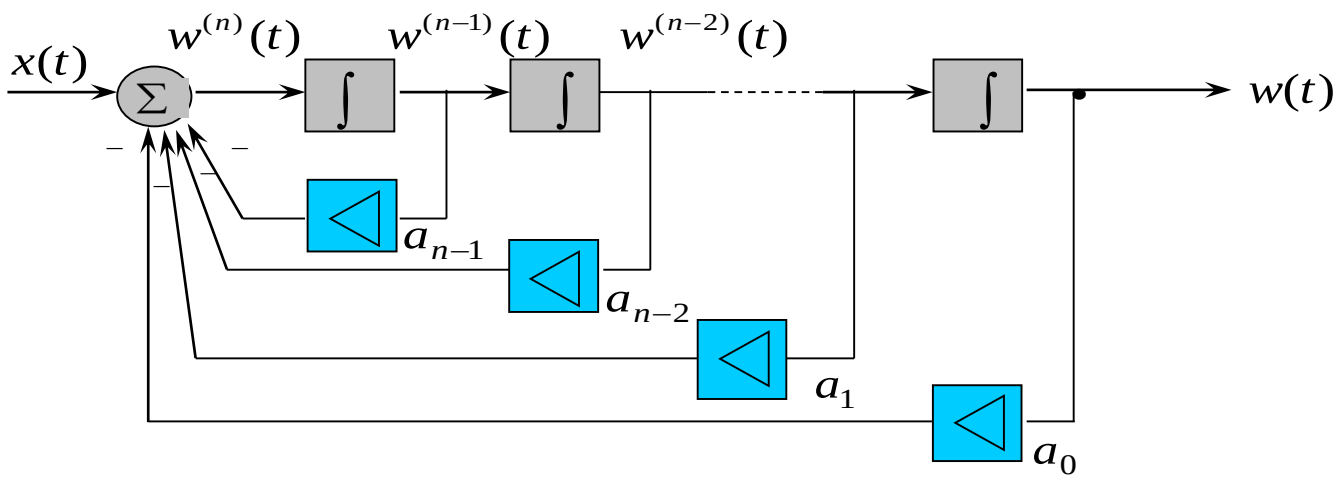

Simulation block diagram of a continuous-time LTI system

※ Direct structure

Then, the block diagram of the direct form simulation can be obtained by formula ②

$$y(t)=b_n w^{(n)}(t)+b_{n-1}w^{(n-1)}(t)+\cdots+b_1 w'(t)+b_0 w(t)$$

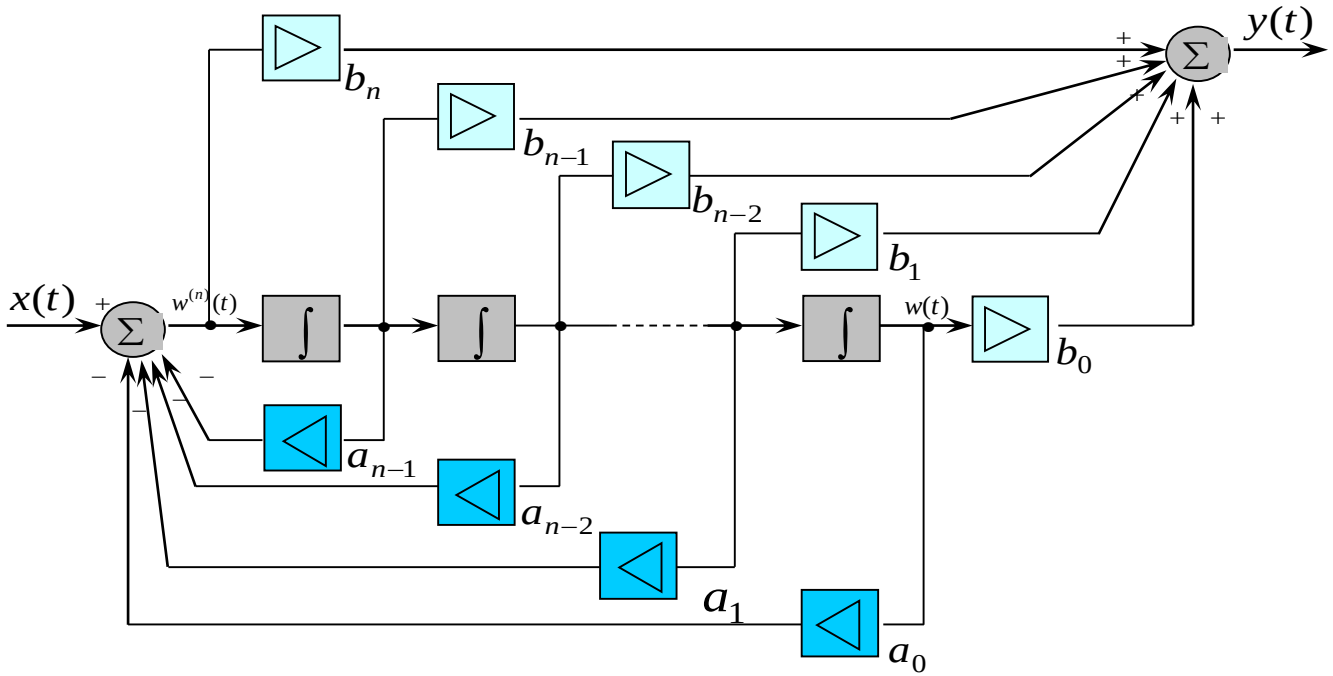

Simulation block diagram of a continuous-time LTI system

※ **Direct structure**

$$H(s)=\frac{b_n+b_{n-1}s^{-1}+\cdots+b_1s^{-(n-1)}+b_0s^{-n}}{1+a_{n-1}s^{-1}+\cdots+a_1s^{-(n-1)}+a_0s^{-n}}$$

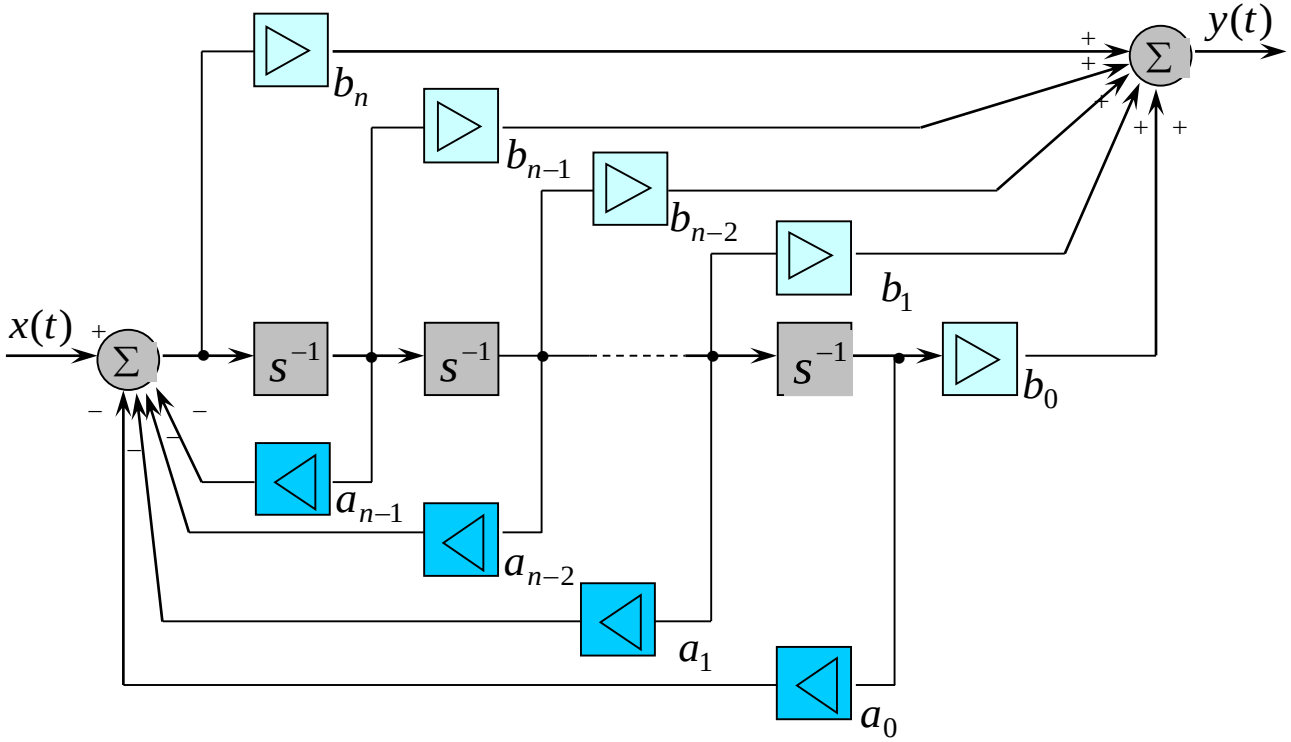

The denominator corresponds to the feedback loop and the numerator corresponds to the forward path

Simulation block diagram of a continuous-time LTI system

※ Cascade structure

Decompose $N(s)$ and $D(s)$ of the system function into first-order or second-order real coefficient factor forms, and then compose them into first-order or second-order subsystems, namely

$$H(s) = H_1(s)\, H_2(s)\, \ldots\ldots\, H_n(s)$$

Draw a direct-type analog block diagram of each subsystem, and then cascade the subsystems.

Simulation block diagram of a continuous-time LTI system

※ Parallel structure

Expand the system function into the form of the sum of partial fractions to form a parallel connection of **first-order or second-order subsystems**, namely

$$H(s) = H_1(s) + H_2(s) + \ldots. + H_n(s)$$

Draw the direct-type analog block diagram of each subsystem, and then connect the subsystems in parallel.

Example: The system function of a continuous-time LTI system is known

Draw a block diagram of the system.

$$H(s)=\frac{5s+5}{s^3+7s^2+10s}$$

Solution: (1) Direct type analog block diagram

$$H(s)=\frac{5s^{-2}+5s^{-3}}{1+7s^{-1}+10s^{-2}}$$

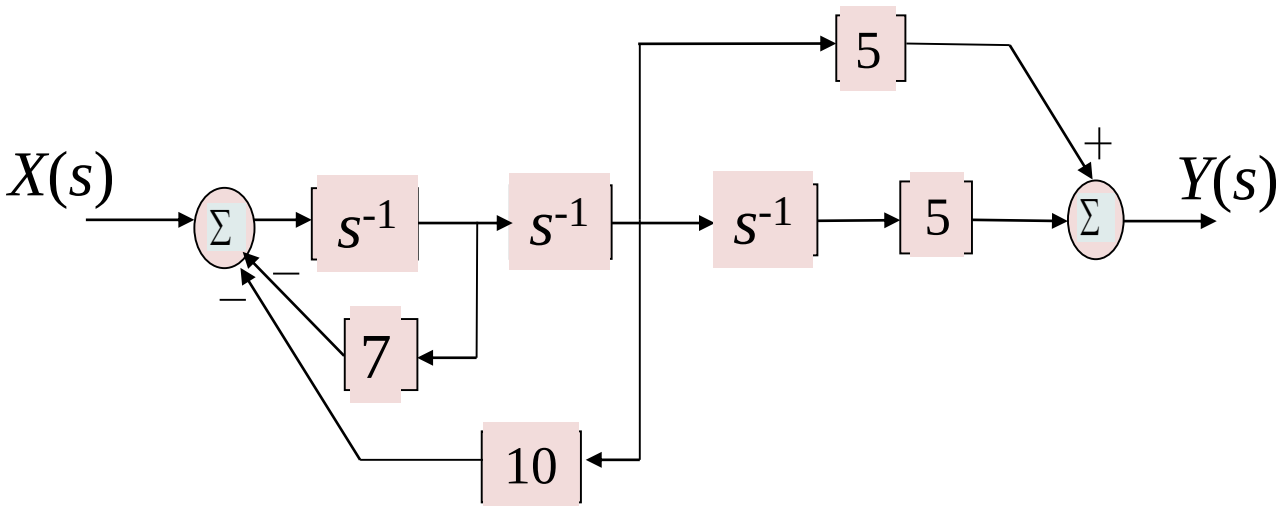

Example: The system function of a continuous-time LTI system is known

$$H(s)=\frac{5s+5}{s^3+7s^2+10s}$$

Draw a block diagram of the system.

Solution: (2) Cascade Block Diagram

$$H(s)=\frac{5s+5}{s}\times\frac{1}{s+2}\times\frac{1}{s+5}$$

$$H(s)=(5+5s^{-1})\times\frac{s^{-1}}{1+2s^{-1}}\times\frac{s^{-1}}{1+5s^{-1}}$$

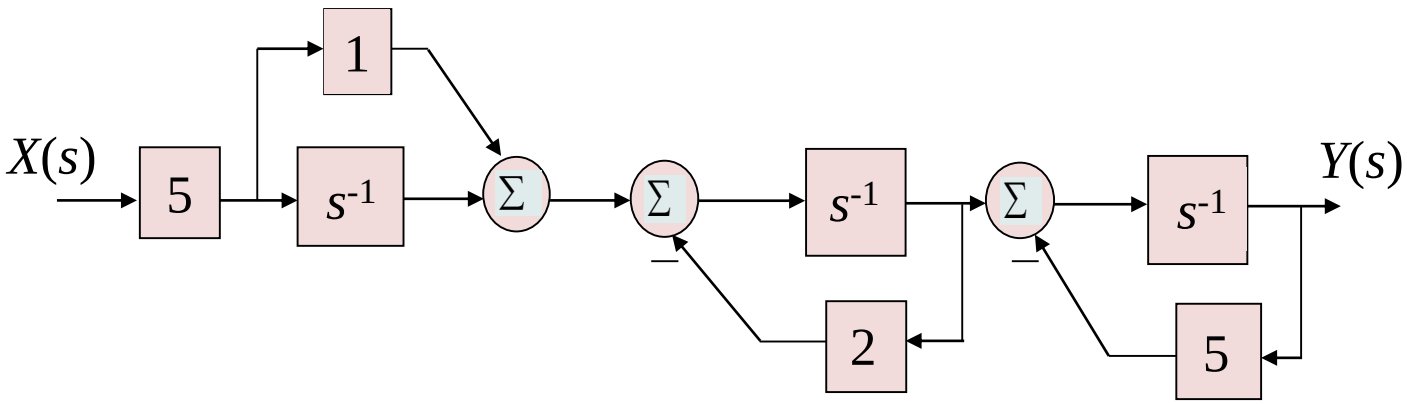

Example: The system function of a continuous-time LTI system is known

$$H(s)=\frac{5s+5}{s^3+7s^2+10s}$$

Draw a block diagram of the system.

Solution: (3)Parallel block diagram

$$H(s)=\frac{1}{2s}+\frac{5}{6s+12}-\frac{4}{3s+15}=\frac{s^{-1}}{2}+\frac{(5/6)s^{-1}}{1+2s^{-1}}-\frac{(4/3)s^{-1}}{1+5s^{-1}}$$

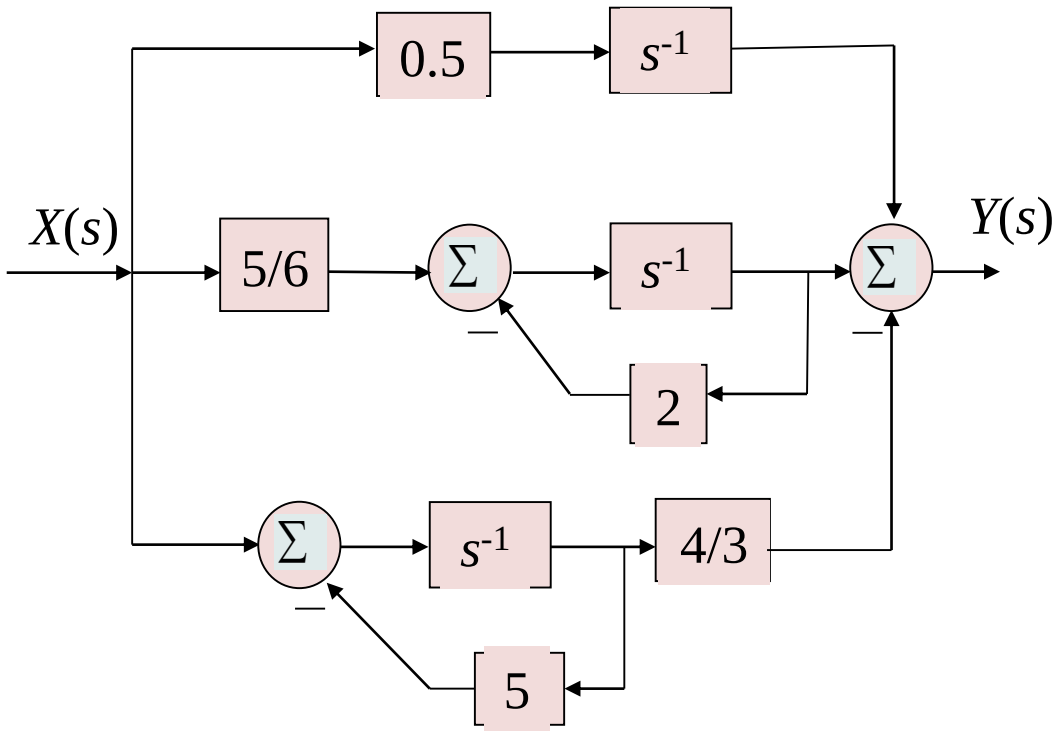

Thanks

Some of the materials cited in this course are the teaching accumulation of the main lecturer for many years, which come from a variety of media and the exchanges of colleagues, peers and friends, and it is difficult to indicate the source one by one, so I hereby explain and thank you!